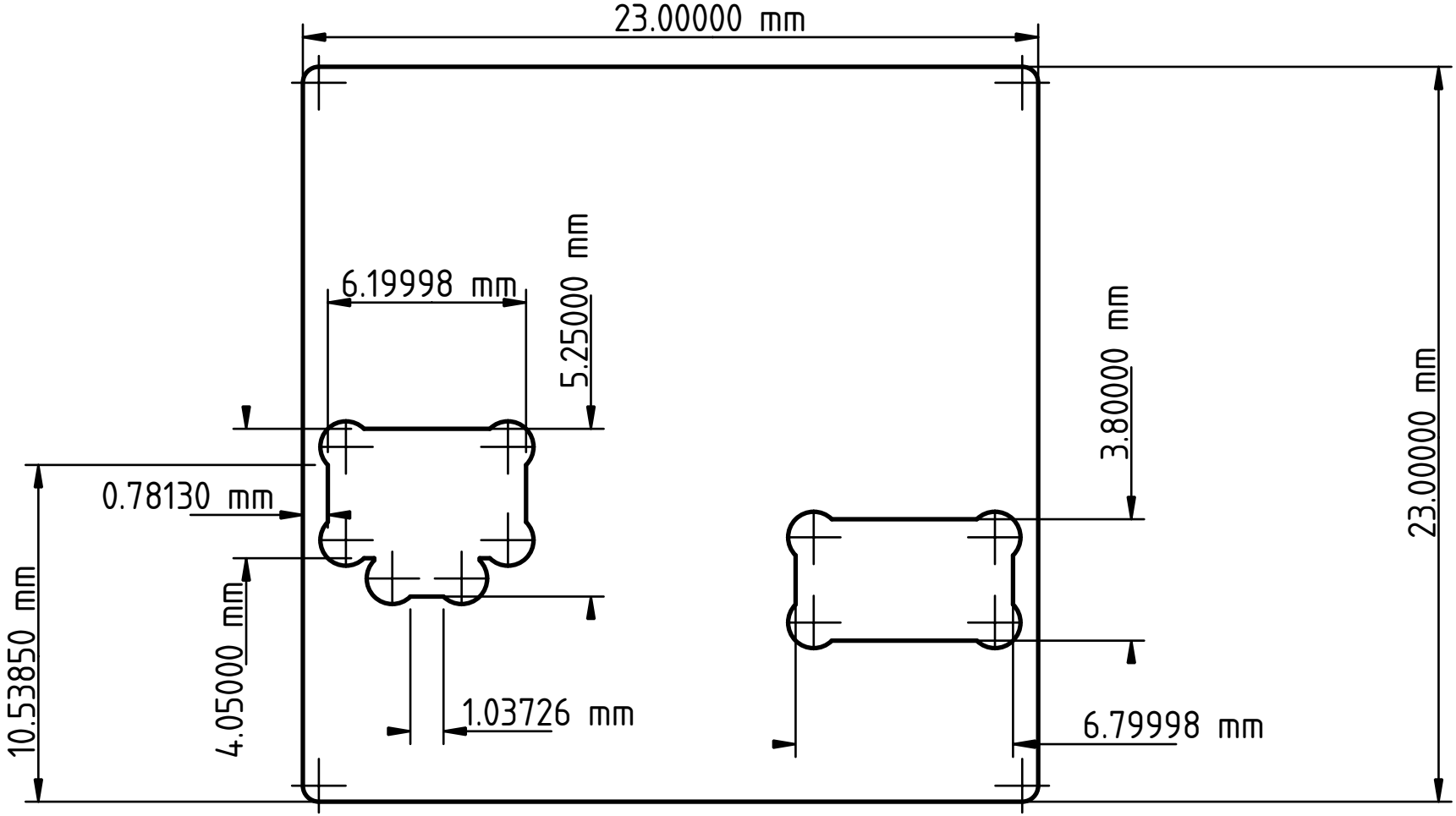
23.00000 mm
6.19998 mm
5.25000 mm
3.80000 mm
23.00000 mm
0.78130 mm
10.53850 mm
4.05000 mm
1.03726 mm
6.79998 mm